# WELDED STEEL ANGLE BRACKET

PRELIMINARY DESIGN REVIEW / INCHES / SHOWING NOMINAL DIMENSIONS

**REVISION A**

27 NOV 2026

## TOP VIEW / horizontal base

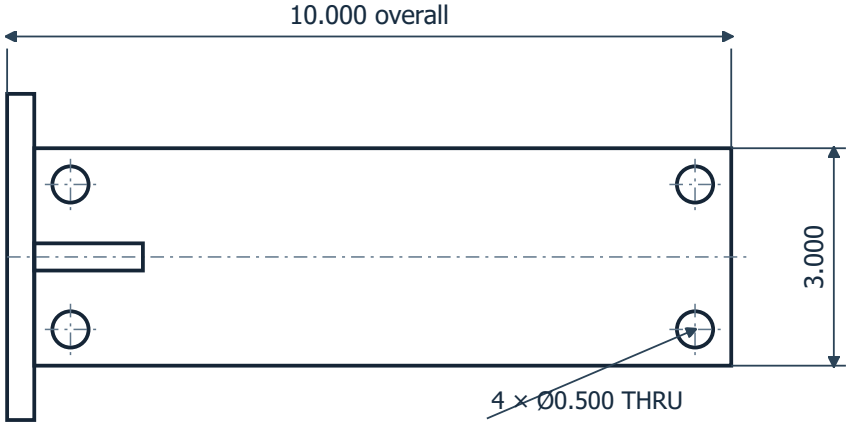


## ISOMETRIC / 3D CAD model

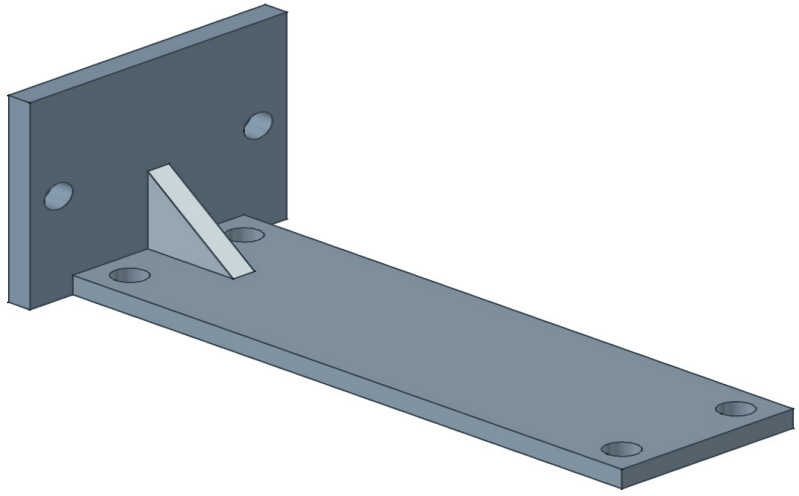

## FRONT VIEW / upright mounting face

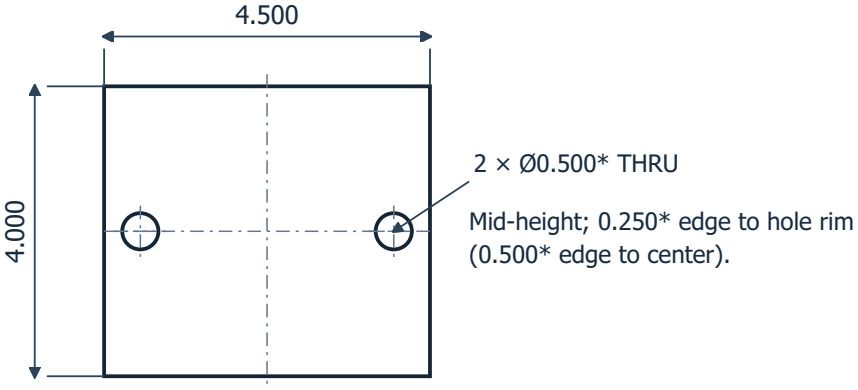


## SIDE VIEW / weldment and gusset

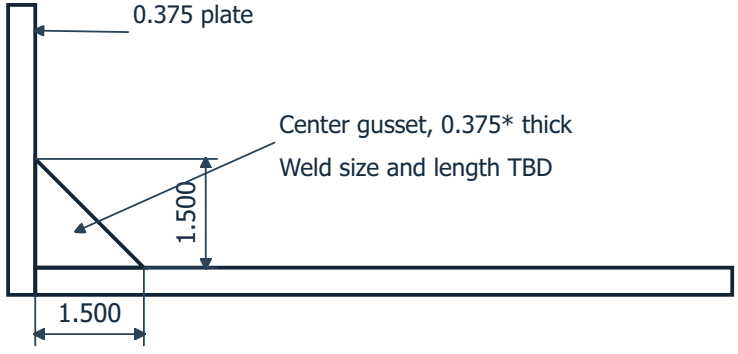


## * PROVISIONAL – CONFIRM BEFORE FABRICATION

Base hole centers: 0.500* from each adjacent base plate edge. Upright holes, gusset thickness and weld details need confirmation.

10.000 is the overall reach, including upright thickness. The centered horizontal plate blank is 9.625 × 3.000. Steel grade and tolerances not specified.

Review only. No weld geometry, structural load rating, or fabrication approval is implied.